LED line LITE

Code: 242250

EAN: 5901583242250

LED bulb GU10 2700K 1W 80lm 230V 120° Glass LITE



LITE GU10 LED line bulb is an ideal solution for demanding users looking for an efficient and stylish light source. It emits a pleasant, warm light of 2700 K and a light stream of 80 lumens, ensuring efficiency of 80 lm/W. Thanks to the use of modern SMD2835 diodes and energy class G, it is characterized by low energy consumption. The life of the product is as high as 30,000 hours.

3 WARRANTY | IP 20 | ON/OFF 50.000

Technical data

Parameter	Value
Energy efficiency class 2019/2015	G
Warranty	3
Power	• 1 W
Voltage	• 220-260 V AC
Correlated colour temperature	• 2700 K
Colour of the light	White
Colour rendering index Ra	80
Luminous efficacy	80
Luminous flux	80 lm
The lumen maintenance factor	96
Lifetime L70B50	30 000 h
Survival factor	0.9

Parameter	Value
Colour consistency in McAdam ellipses	≤6
Frequency of the supply voltage	50/60Hz
Beam angle	120 °
LED type	SMD2835
Number of on/off cycles	50000
Lamp's warm-up time to 60%	1
Ambient temperature suitable for operation	-20÷40
For indoor use	Inside
Height	55
Fixture's diameter	50 mm
Material (housing)	Glass
Material (cover)	glass

T: +48 29 764 77 00 export@ledline.pl **www.ledline.pl/en**

LED line LITE

Code: 242250

EAN: 5901583242250

LED bulb GU10 2700K 1W 80lm 230V 120° Glass LITE

Technical drawing

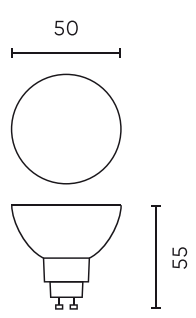

Light distribution

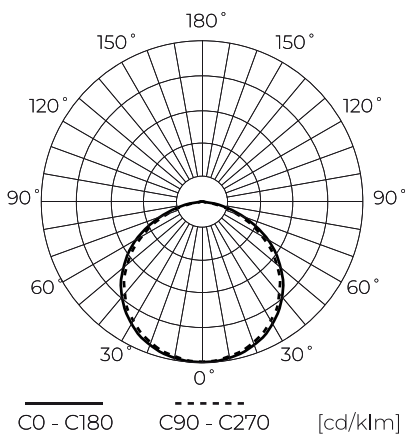

Additional product photos

Logistics data

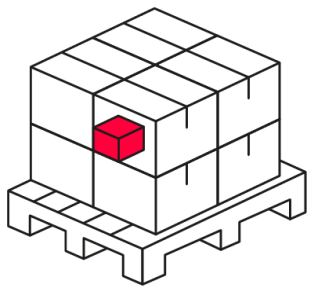

Single packaging

Quantity	10
Width	50 mm
Height	50 mm
Length	60 mm
Weight	0,07 kg

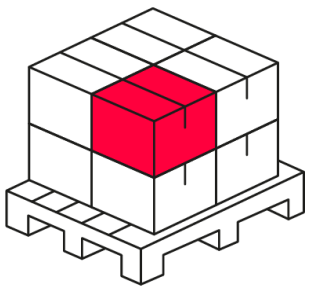

Bulk packaging

Quantity	100
Width	610 mm
Height	235 mm
Length	150 mm
Volume	0,021 m3
Weight	6,5 kg
Comments	

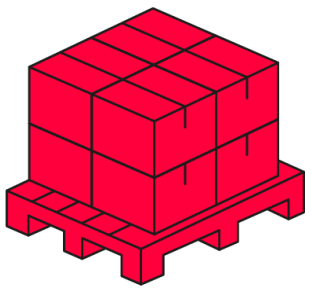

Europallet

Quantity	5600
Height	1,8 m
Quantity in layer	700
Number of layers	8
Bulk quantity	100
Weight	305 kg

T: +48 29 764 77 00 export@ledline.pl **www.ledline.pl/en**

LED line LITE

Code: 242250

EAN: 5901583242250

LED bulb GU10 2700K 1W 80lm 230V 120° Glass LITE

Example application

T: +48 29 764 77 00 export@ledline.pl **www.ledline.pl/en**